SureSiteâ
Magnetic Liquid Level Indicator

Installation, Operation and Maintenance
Bulletin No. 177664-2 (Rev. B)

Section 2: Switches

Operation

The SureSite Switch Module, available for use with the SureSite Magnetic Liquid Level Indicator, is a sealed assembly containing a magnetically actuated "latching-reed" switch assembly. The reed switch is actuated by the movement of the magnet contained in the SureSite float. The design of the reed switch permits the switch module to perform as either a "normally open" or "normally closed" switch. When installed with the lead wires (or junction box) installed at the top, the switch module is "normally open" and the reed switch will close with the rising fluid level in the tank; remaining closed until a falling fluid level in the tank causes the float to drop below the indicating position, opening the reed switch. When installed with the lead wires (or junction box) at the bottom, the switch module is "normally closed" and the reed switch will open with the rising fluid level in the tank, and remain open until a falling fluid level in the tank causes the float to drop below the indicating position, closing the reed switch. (See sketches below)
For electrical schematics of the switch module, please refer to the Wiring Diagrams, located on pages 5 and 6.

- Normally Open Operation -	- Normally Closed Operation -
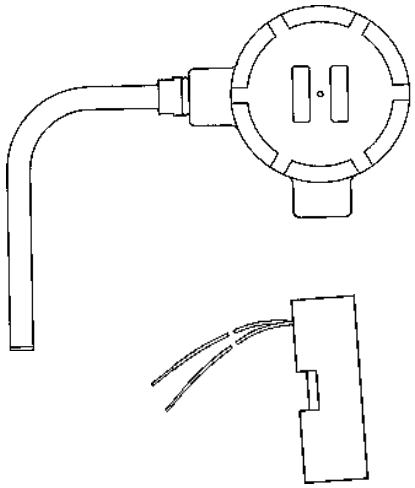	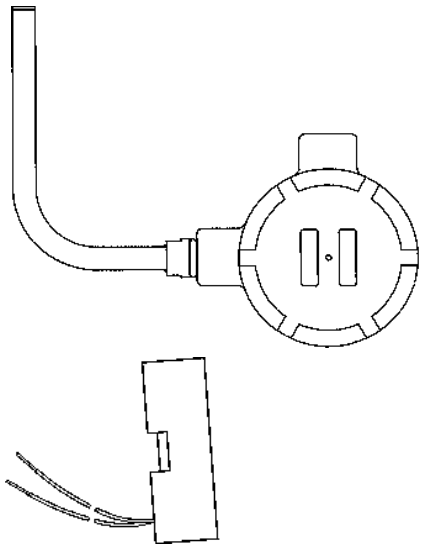
Lead Wires and Junction Box Positioned at Top	Lead Wires and Junction Box Positioned at Bottom

Installation

General: The SureSite switch module must be mounted 180^{0} opposite the flag assembly of the SureSite Magnetic Level Indicator and within its operating range. The installation of the switch module varies, depending on the switch module housing and the type of SureSite Magnetic Level Indicator. The chart on the next page is intended to provide an overview of the various switch modules and to indicate which diagram(s) should be referred to for installation instructions.

Installation (Cont.)

If it is necessary to locate two switch-points close together, two switch modules can be positioned side-by-side and located 180^{0} opposite of the flag assembly, as shown.

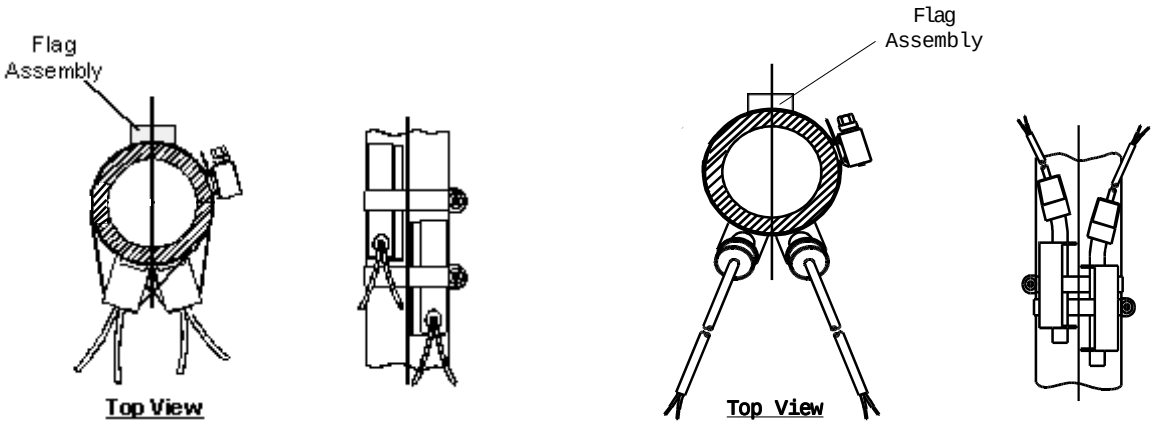

Switch Modules

Part Number	SureSite Type	Switch Rating / Configuration	Max. Fluid Temp (°F / °C)	Mounting Hardware			Switch Housing Material
				Bracket / Spacer Block	Clamp	J-Box	
Standard							
85350	Standard	20 VA SPST, N.O. or N.C.	300 / 148	N/A	N/A	N/A	Polysulfone
86435	Standard	20 VA SPST, N.O. or N.C.	300 / 148	N/A	Incl.	N/A	Polysulfone
86567	Mini	20 VA SPST, N.O. or N.C.	300 / 148	N/A	Incl.	N/A	Polysulfone
87480	Mini / Plastic	20 VA SPST, N.O. or N.C.	300 / 148	N/A	N/A	N/A	Polysulfone
80469	Plastic	20 VA SPST, N.O. or N.C.	300 / 148	N/A	N/A	N/A	Polysulfone
High Temperature							
83140	All	20 VA SPST, N.O. or N.C.	750 / 398	Incl.	N/A	N/A	316 SS
83150	All	20 VA SPST, N.O. or N.C.	750 / 398	Incl.	N/A	N/A	316 SS
84320	All	20 VA SPDT, N.O. or N.C.	750 / 398	Incl.	N/A	N/A	316 SS
803430	All	220 VDC, 5 Amp	750 / 398	Incl.	Incl.	Incl.	316 SS
Explosion-Proof / High Temperature							
83100*	All	120 VDC, 10 Amp	750 / 398	Incl.	Incl.	Incl.	316 SS
83110*	All	24 VDC, 10 Amp	750 / 398	Incl.	Incl.	Incl.	316 SS
83120*	All	20 VA SPST, N.O. or N.C.	750 / 398	Incl.	Incl.	Incl.	316 SS
83130*	All	20 VA SPST, N.O. or N.C.	750 / 398	Incl.	Incl.	Incl.	316 SS
84330	All	20 VA SPDT, N.O. or N.C.	750 / 398	Incl.	Incl.	Incl.	316 SS

*Factory Mutual approved for:

Explosion-proof for Class 1, Division 1, Groups C & D and Class 1, Division 2, Groups B, C & D; Dust ignition proof per Class 2, Division 1, Groups E, F & G and suitable for Class 3, Division 1, Hazardous Location, Indoors (Ref. File #J.I. 0A8A3.AE). Also CSA certified for Class 1, Division 1, Groups B, C & D (Ref. Files LR22666-22 and LR22666-24).

Note

For Standard Unit installation instructions, see Mounting Diagram "A"

For all other part numbers listed above, see Mounting diagram "B", "C" or "D"

- Mounting Diagrams -

Diagram A

Standard SureSite®

Switch Part Numbers
80469, 85350, 86435, 86567, 87480

1. Position the switch module 180° from the flag assembly and within indicating range.

2. Slide the switch clamp between the flag assembly and the weldment of your SureSite Magnetic Level Indicator.

3. With the switch module located at the desired fluid level, tighten the clamp screw securely; not to exceed a torque of 10 lb-inches.

4. Connect the switch module leads to the load circuit.

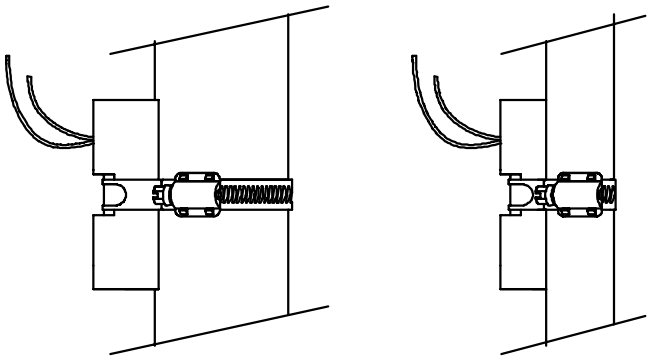

Mini SureSite®

Diagram B

1. Position the switch module 180° from the flag assembly and within indicating range.

2. Slide the tabs of the switch clamps between the flag assembly and the weldment of the Mini SureSite Magnetic Level Indicator; wrapping the retaining screw-end around the upper and lower stem of the switch, as shown.

3. With the switch module located at the desired fluid level, tighten the clamp screw securely; not to exceed a torque of 120 lb-inches.

4. Connect the switch module leads to the load circuit.

Switch Part Numbers
83100, 83110, 83120, 83130. 83140, 83150, 84320, 84330

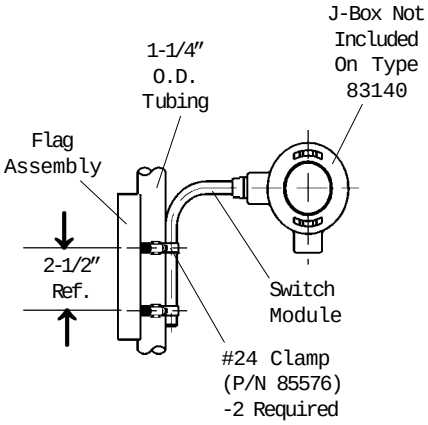

Switch Part Numbers
83150, 84320

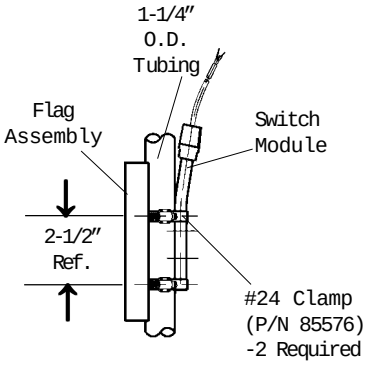

Alloy SureSite®

Diagram C

1. Slide the switch into the support bracket.

2. Position the switch module 180° from the flag assembly and within indicating range.

3. Slide the switch clamp between the switch bracket and the stem of the switch, then between the flag assembly and the weldment of your SureSite Magnetic Level Indicator.

4. With the switch module located at the desired fluid level, tighten this clamp screw securely, not to exceed a torque of 120 lb-inches.

5. Connect the switch module leads to the load circuit.

Switch Part Numbers 83100, 83110, 83120, 83130. 83140, 83150, 84320, 84330

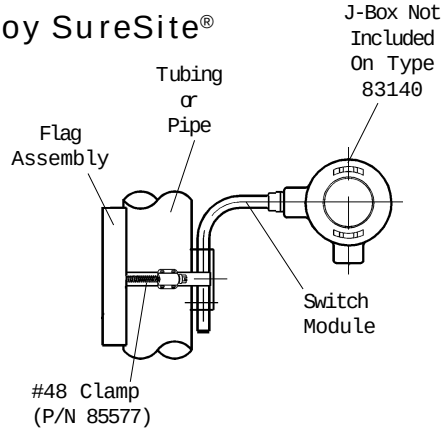

Switch Part Numbers 83150, 84320

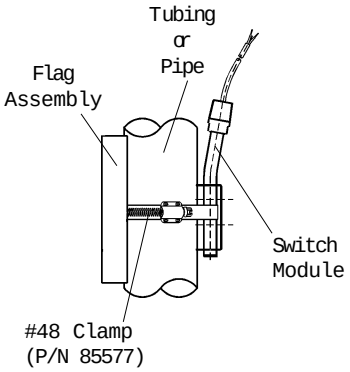

Plastic SureSite®

Diagram D

1. Slide the switch into the plastic spacer block.

2. Position the switch module 180° from the flag assembly.

3. Slide the tabs of the switch clamps between the flag assembly and the weldment of your SureSite Magnetic Level Indicator, wrapping the retaining screw-ends around the stem of the switch, above and below the spacer block and the desired indication/activation level, as shown.

4. With the switch module located at the desired fluid level, tighten both clamp screws securely, not to exceed a torque of 120 lb-inches.

5. Connect the switch module leads to the load circuit.

Switch Part Numbers 83100, 83110, 83120, 83130. 83140, 83150, 84320, 84330

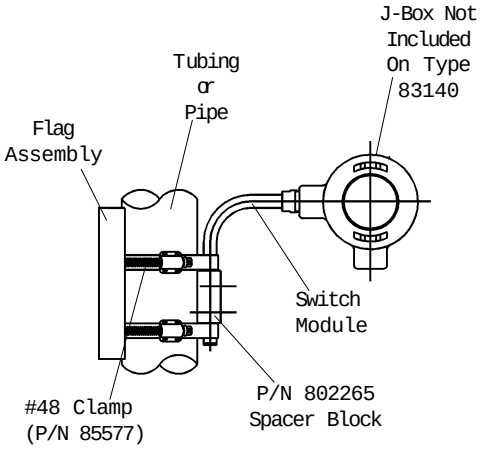

Switch Part Numbers 83150, 84320

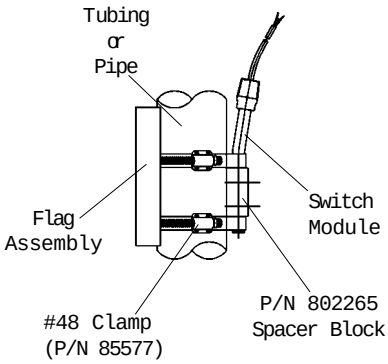

Wiring Diagrams

Part Numbers
80469, 87480, 85350, 86435, 86567

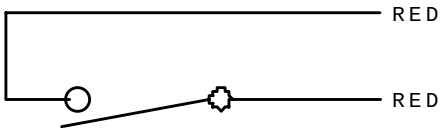

SPST, N.O. or N.C. (Dry)

Part Number 83100
- Dry Condition -

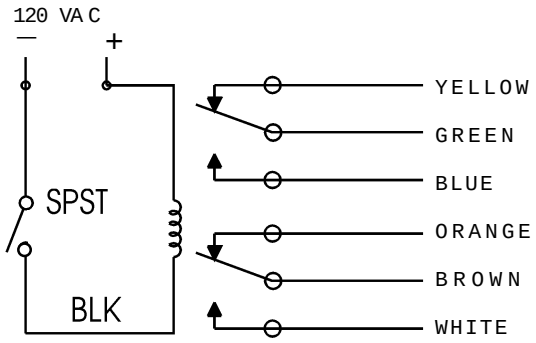

Part Number 83110
- Dry Condition -

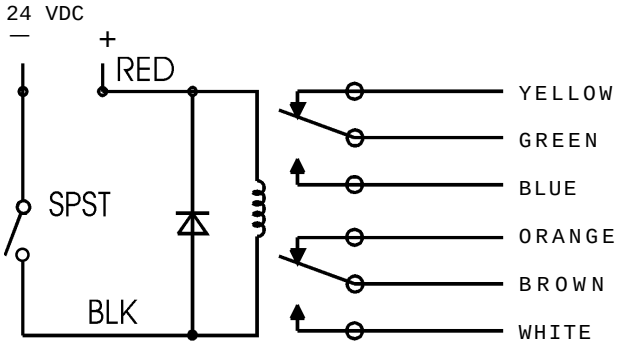

Part Numbers
83120, 83140, 83150
- Dry Condition -

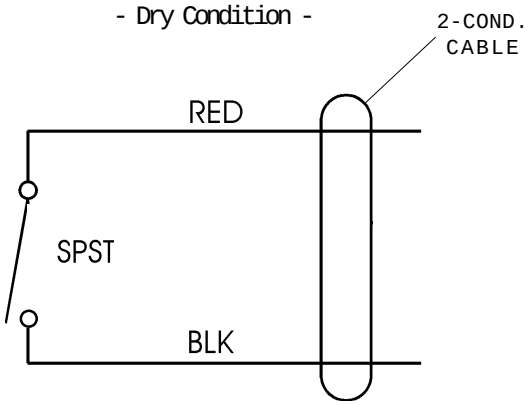

Part Number 83130
- Dry Condition -

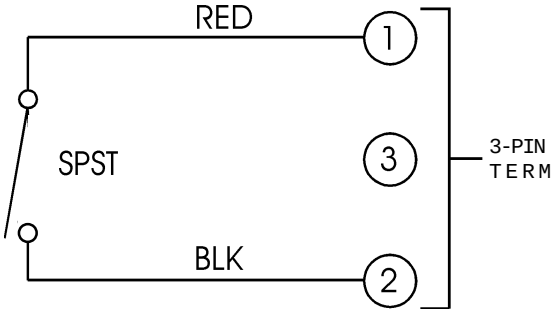

Part Numbers
84320, 84330 DPDT
- Dry Condition / J-Box at Top -

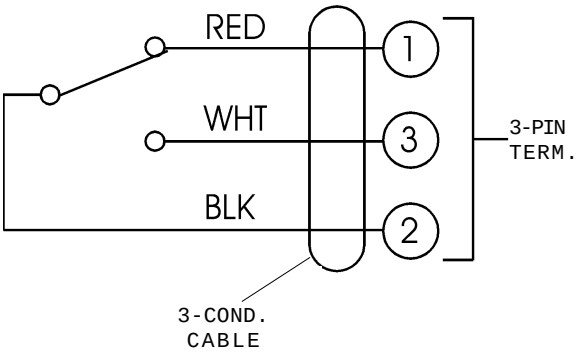

Wiring Diagrams (Cont.)

Part Numbers
84320, 84330
- Dry Condition / J-Box at BTM -

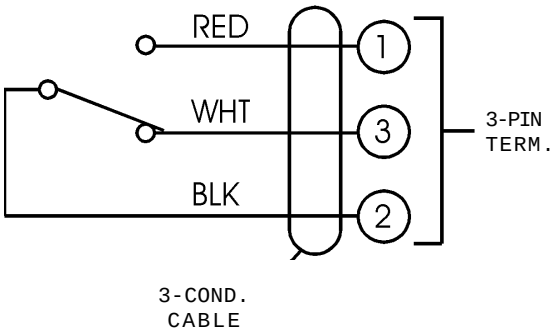

Switch Module Troubleshooting

Condition	Possible Cause	Solution
Intermittent Switching or Not Latching	Positioned Incorrectly	Reposition Switch Modules
	Switch not in Indicating Range	Reposition Switch Modules
	Incorrect Mounting Hardware	See Appropriate Mounting Diagram
	Incorrect Wiring Between Switch & Load	Correct Wiring (See Wiring Diagrams)
Switch Not Switching Switch Remains Open or Closed At All times	Positioned Incorrectly	Reposition Switch Modules
	Switch Not in Indicating Range	Reposition Switch Modules
	Incorrect Mounting Hardware	See Appropriate Mounting Diagram
	Incorrect Wiring Between Switch & Load	Correct Wiring (See Wiring Diagrams)
	Switch Rating Exceeded	Replace Switch (See Appropriate Rating Diagram)

Gems Sensors Inc.
One Cowles Road
Plainville, CT
06062.1198

tel 860.747.3000
fax 860.747.4244